1880151
K-Corner Bookshelf
Parts List

A.	Finials	3 pcs
B.	Spindles	12 pcs
C.	Shelves	5 pcs
D.	Feet	3 pcs
E.	Metal Brackets	2 pcs
F.	Phillips Head Screws	2 pcs
G.	Phillips Head Screwdriver	1 pc

* Please make sure that you have all the parts indicated above before you begin assembly of this item.
* This item should be assembled on a soft surface to prevent scratching the finish during assembly.
* This item may require periodic tightening.
* This item is to be assembled by an adult and is not intended to be taken apart by a child

Hardware Illustration

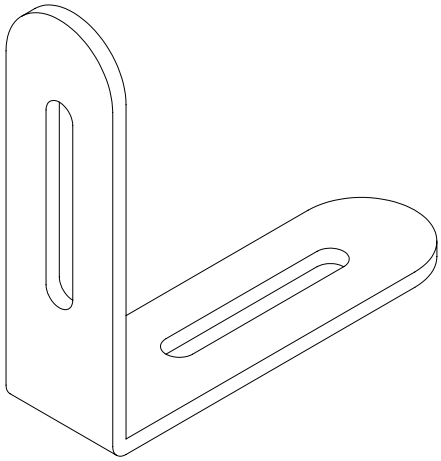

E. Metal Bracket

F. Phillips Head Screw

1880151
K-Corner Bookshelf

Assembly Instructions

1. **Attach Metal Brackets (E)** Place the one Shelf (C) with pre-drilled holes on the edges upside down on soft surface. Attach the Metal Brackets (F) onto the two sides with Phillips Head Screws (F) using Phillips Head Screwdriver (G). See illustration. **Note: Grooves in metal brackets allow you to adjust the distance from the wall.**
2. **Attach Feet (D)** Insert the exposed threads of Feet (D) through the Shelf (C) with Bombay Copyright, Brass Logo, Production Sticker and into the pre-threaded holes in the Spindles (B). Tighten by turning in a clockwise direction. See illustration.
3. Refer to step 1 to attach the remaining Shelves (C), Spindles (B) and Finials (A). See illustration.

Note: The shelf with metal brackets should be the TOP SHELF and attached to the wall for maximum stability and safety.

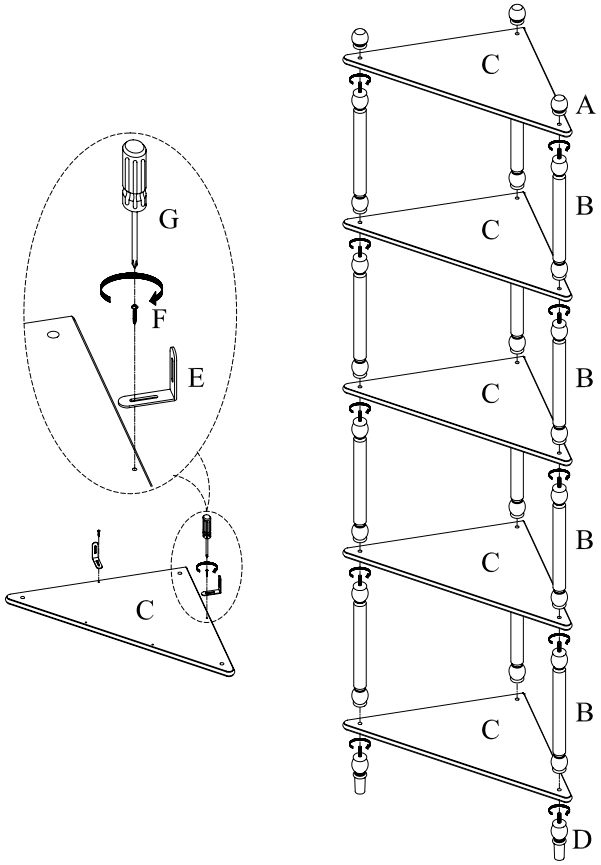

Hanging Devices

Hanging hardware will be needed to secure this item to the wall in your home. Due to the many different types of materials used in home construction you will need to choose an appropriate wall fastener to ensure this item is securely hung. Please consult your local hardware specialist in selecting appropriate hardware and determining proper installation procedures based on your particular needs.